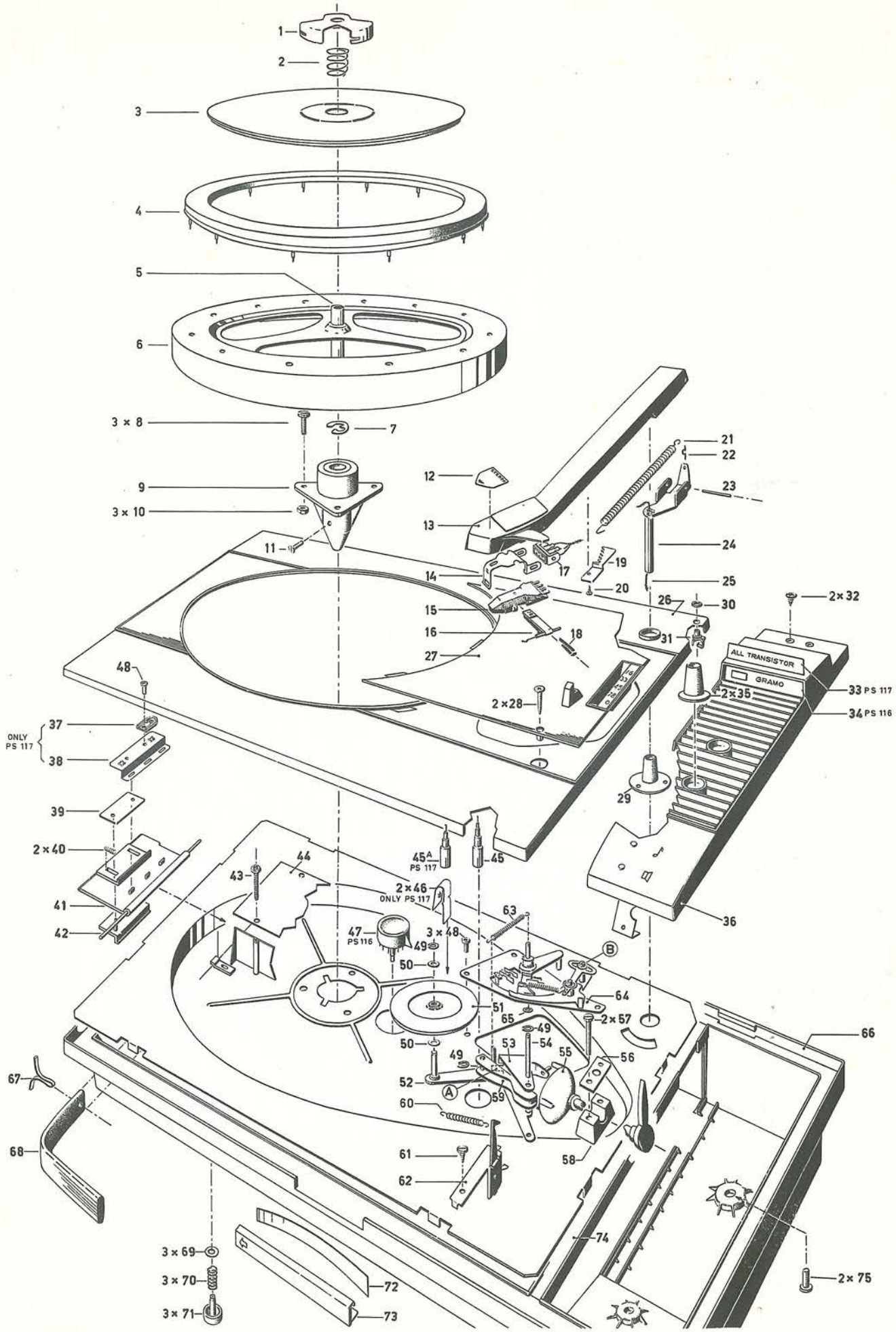

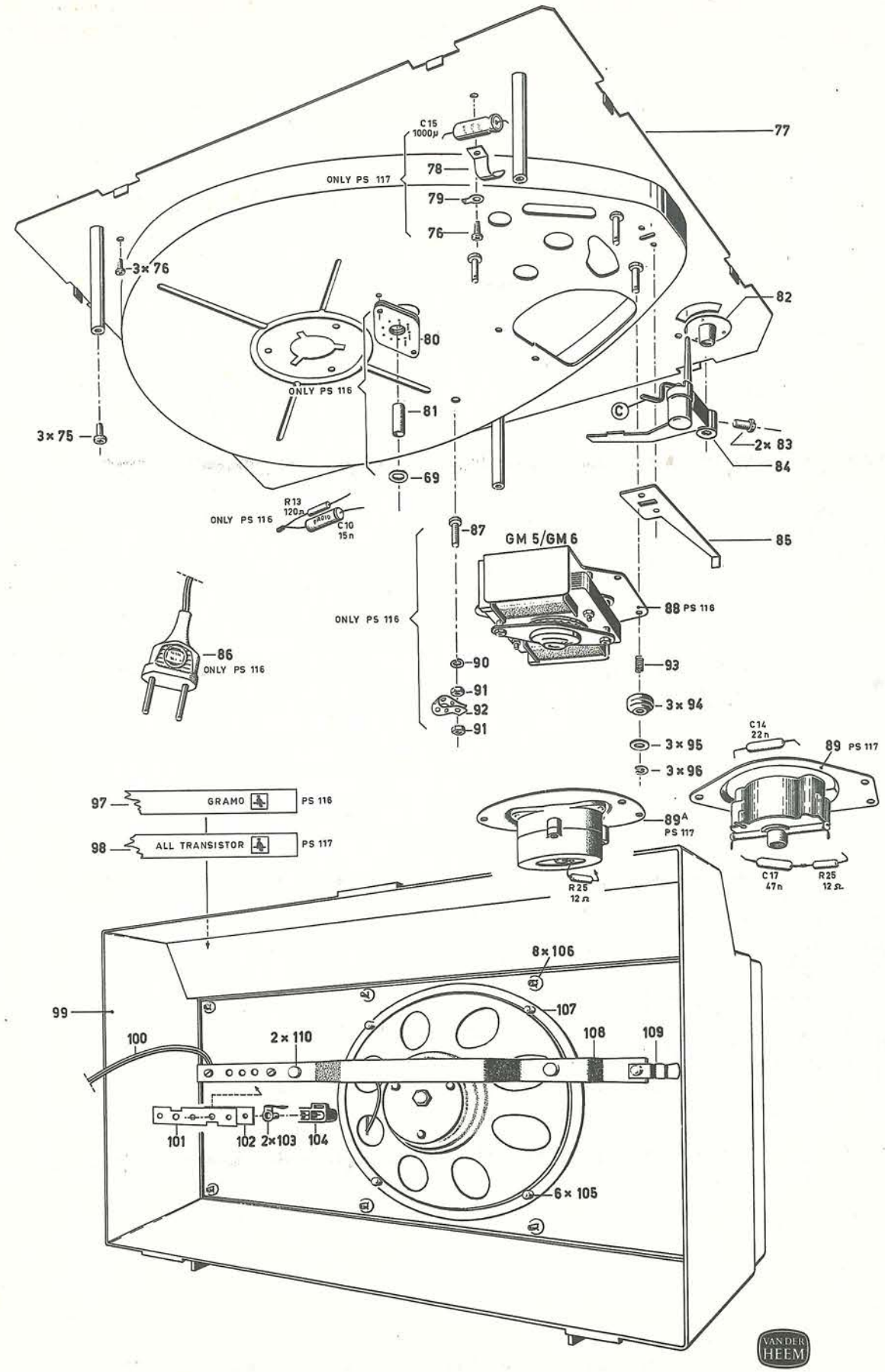

ERRES PS 116
PS 117

© van der Heem & Bloemsma documentatie centrum ®
www.vanderheem.com www.erres.eu vdheem@planet.nl

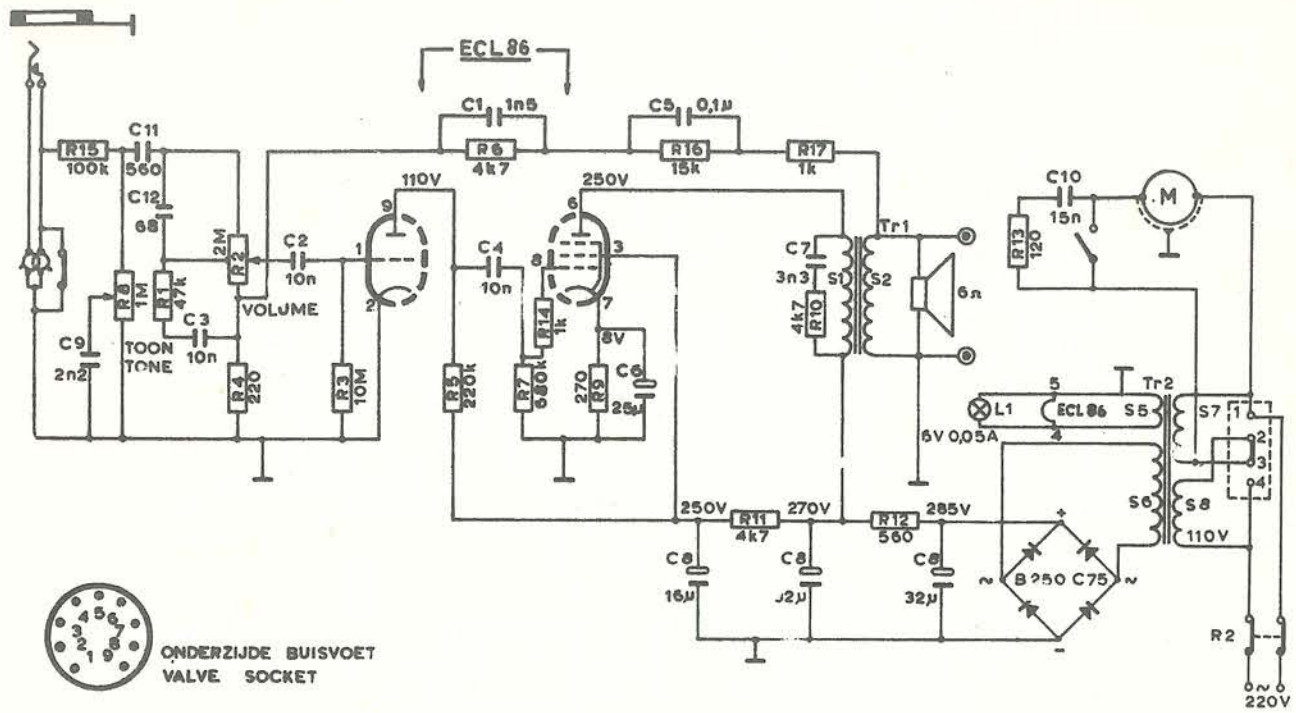
ECL 86
C1 1n5
C5 0,1µ
R15 100k
C11 560
C12 68
R6 4k7
R16 15k
R17 1k
110V
250V
C2 10n
C4 10n
VOLUME
TOON
TONE
C9 2n2
C3 10n
R8 1M
R1 47k
R2 2M
R4 220
R3 10M
R5 220k
R7 680k
R14 1k
R9 270
C6 25µ
8V
Tr1
C7 3n3
S1
S2
4k7 R10
6Ω
C10 15n
R13 120
M
L1
ECL 86
S5
Tr2
S7
6V 0,05A
S6
S8
110V
250V
R11 4k7
270V
R12 560
285V
C8 16µ
C8 32µ
C8 32µ
B 250 C75
R2
220V
ONDERZIJDE BUISVOET
VALVE SOCKET

ERRES PS 116

| | | |